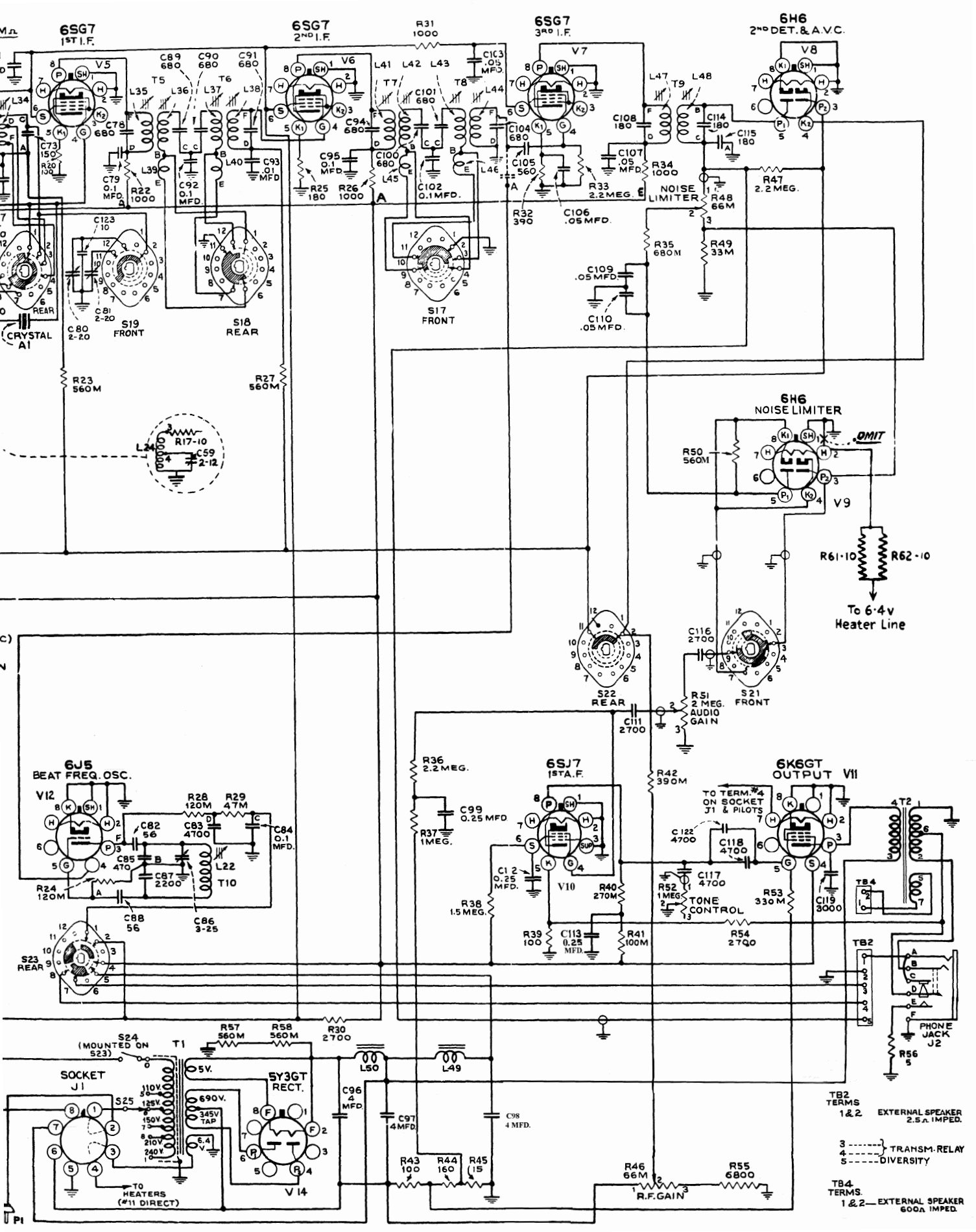
6SG7
1ST I.F.
6SG7
2ND I.F.
6SG7
3RD I.F.
6H6
2ND DET. & A.V.C.
V5
V6
V7
V8
R31
1000
C103
.05
MFD.
C89
680
C90
680
C91
680
T5
T6
T7
T8
L35
L36
L37
L38
L39
L40
L41
L42
L43
L44
L45
L46
L47
L48
T9
C78
680
C73
150
R20
100
C79
0.1
MFD.
R22
1000
C92
0.1
MFD.
C93
.01
MFD
C94
680
C95
0.1
MFD.
R25
180
R26
1000
C100
680
C101
680
C102
0.1 MFD.
C104
680
C105
560
R32
390
C106
.05 MFD.
R33
2.2 MEG.
C108
180
C107
.05
MFD.
R34
1000
C114
180
C115
180
R47
2.2 MEG.
NOISE
LIMITER
R48
66M
R35
680M
R49
33M
C109
.05 MFD.
C110
.05 MFD.
C123
10
C81
2-20
C80
2-20
S19
FRONT
S18
REAR
S17
FRONT
CRYSTAL
A1
R23
560M
R27
560M
R17-10
L24
C59
2-12
6H6
NOISE LIMITER
OMIT
R50
560M
V9
R61-10
R62-10
To 6·4v
Heater Line
C116
2700
S22
REAR
S21
FRONT
R51
2 MEG.
AUDIO
GAIN
C111
2700
6J5
BEAT FREQ. OSC.
V12
R28
120M
R29
47M
C82
56
C83
4700
C84
0.1
MFD.
C85
470
C87
2200
L22
T10
R24
120M
C88
56
C86
3-25
S23
REAR
R36
2.2 MEG.
C99
0.25 MFD
R37
1MEG.
6SJ7
1ST A.F.
V10
C12
0.25
MFD.
R38
1.5 MEG.
R40
270M
R39
100
C113
0.25
MFD.
R41
100M
R42
390M
6K6GT
OUTPUT V11
TO TERM. #4
ON SOCKET
J1 & PILOTS
C122
4700
C118
4700
C117
4700
R52
1 MEG.
TONE
CONTROL
R53
330M
C119
3000
R54
270
T2
TB4
TB2
PHONE
JACK
J2
R56
5
S24
(MOUNTED ON
S23)
T1
R57
560M
R58
560M
R30
2700
SOCKET
J1
S25
110V.
125V.
150V.
210V.
240V.
5V.
690V.
345V
TAP
6.4
V.
5Y3GT
RECT.
V14
TO
HEATERS
(#11 DIRECT)
L50
L49
C96
4
MFD.
C97
4 MFD.
C98
4 MFD.
R43
100
R44
160
R45
15
R46
66M
R.F. GAIN
R55
6800
P1
TB2
TERMS
1 & 2
EXTERNAL SPEAKER
2.5Ω IMPED.
3
4
TRANSM. RELAY
5
DIVERSITY
TB4
TERMS.
1 & 2
EXTERNAL SPEAKER
600Ω IMPED.